GFM-500C

TM

-
- /
-
-
-

N

-
-
-
-
-

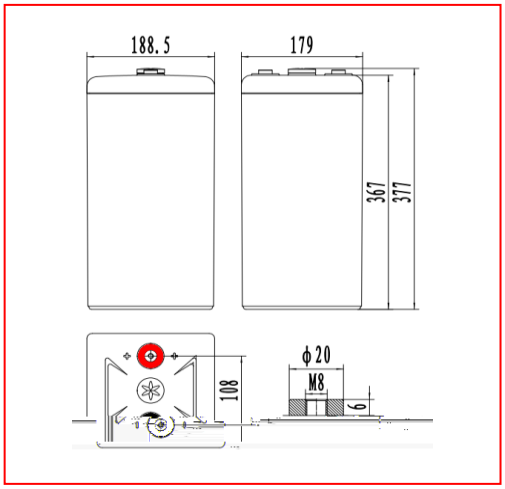

	–
	)3 –
	-3)/
	).2 –
	. –
	/3
	– –
	(/

Ü æ mf

-
-
-

	min			h									
	30	40	50	1	2	3	4	5	6	7	8	9	10
1.60	480	440	375	340	196	145	118	99.0	84.0	75.0	68.0	60.8	55.0
1.65	445	400	350	320	188	140	114	95.0	81.0	73.0	66.0	59.5	54.0
1.70	410	365	330	300	180	135	110	91.0	78.0	71.0	64.0	58.0	52.8
1.75	375	335	300	275	170	130	105	88.0	76.0	69.0	62.0	56.5	51.5
1.80	340	305	275	250	160	125	100	85.0	74.0	66.0	60.0	54.5	50.0

	min			h									
	30	40	50	1	2	3	4	5	6	7	8	9	10
1.60	847	781	668	608	356	265	217	183	156	140	127	114	104
1.65	802	724	636	583	347	261	213	179	153	138	125	113	103
1.70	753	674	611	558	339	256	210	174	150	137	123	112	102
1.75	702	630	566	520	325	250	203	171	148	134	121		